Controller Hardware Design Documentation

1. Project overview

This design outlines a high-efficiency brushless DC (BLDC) motor controller developed for the Shell Eco-Marathon 2026 prototype competition. The controller is engineered to deliver precise speed and torque control while ensuring reliable performance and optimal energy utilization. Its architecture emphasizes durability, responsiveness, and seamless integration with the vehicle's powertrain for maximum efficiency under competitive conditions.

2. Design Structure

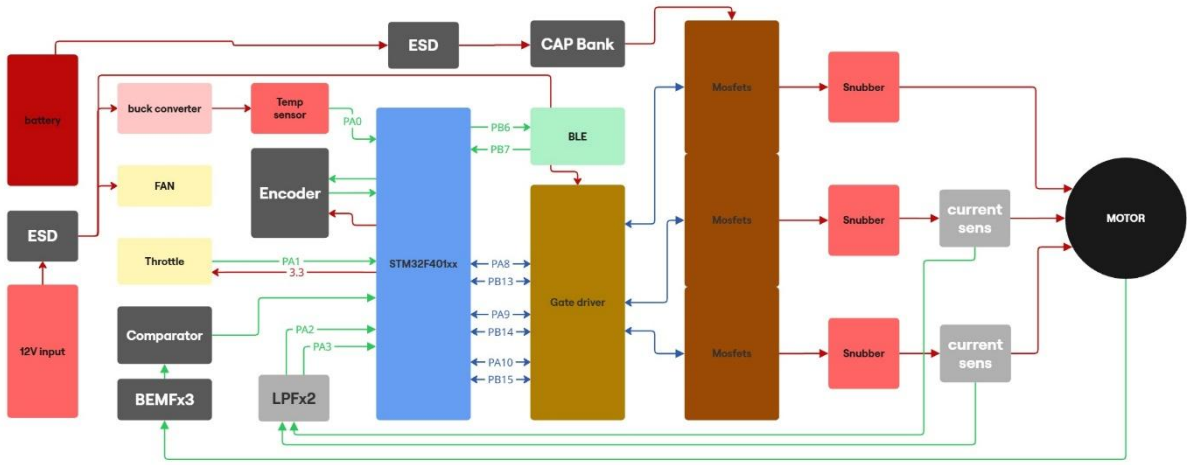

Figure 1 The overall hardware design block diagram

This block diagram represents the overall architecture of a BLDC motor controller system:

- **Power Source**: The system starts with a battery and a 12V input, both protected by ESD (Electrostatic Discharge) components.
- **Power Management**: A buck converter regulates voltage, and a capacitor bank stabilizes power delivery.
- **Control Unit**: An STM32F4 microcontroller acts as the main controller, receiving inputs from the throttle, encoder, temperature sensor, and BLE (Bluetooth Low Energy) module.
- **Signal Processing**: Comparator, BEMF (Back Electromotive Force) sensors, and low-pass filters help in motor feedback and control.

- **Gate Driver and MOSFETs**: These components handle switching to drive the motor phases efficiently.
- **Protection and Sensing**: Snubber circuits protect against voltage spikes, and current sensors monitor motor current.
- **Motor**: The final output drives the BLDC motor with controlled speed and torque.

3. Requirements & Specifications

Electrical Requirements

- Input Voltage: Up to 48 V maximum
- Logic Input Voltage: 12 V input with on-board regulation down to 5 V and 3.3 V
- Maximum Motor Current: 30 A, with integrated current-sensing

Functional Requirements

- SPI Encoder Support:
  Ability to read high-resolution SPI-based magnetic or optical encoders
- Compact Form Factor:
  PCB and component layout must support a small, compact footprint
- Efficient Thermal Management:
  Integration of a high-efficiency heatsink and optimal copper area for heat spreading
- Motor Control:
  Stable and efficient BLDC field-oriented control (FOC) or trapezoidal control

4. Component Selection Rationale

This section explains the reasoning behind the selection of each major component used in the BLDC motor controller. For every part, key parameters, justification, and possible alternatives are included to support future design reviews or revisions.

4.1 Microcontroller (MCU) — STM32F4 Series / Black Pill Module

Why this part?
The STM32F4 MCU family provides a strong balance of computational power, peripheral availability, and cost. Its ARM Cortex-M4 core with floating-point unit is suitable for real-time motor-control algorithms such as FOC or high-speed trapezoidal control. The MCU also includes high-resolution timers, multiple ADC channels,

SPI/UART interfaces, and DMA support, which simplifies control loop implementation.

Key parameters used for selection

- Cortex-M4 @ 84 MHz
- Floating-point unit for motor-control math
- Sufficient ADC resolution (12-bit) for current/voltage sensing
- SPI interface for encoder communication
- Advanced timer for PWM commutation

Alternatives

- STM32G4 (more advanced motor-control features, but higher cost)
- ESP32 (cheaper and dual-core, but weaker ADC performance)
- TI C2000 series (excellent motor control but less accessible and expensive)

4.2 Gate Driver — DRV8300

Why this part?
The DRV8300 is a robust, high-voltage BLDC gate driver with integrated protections. It offers reliable switching of N-MOSFETs, supports bootstrap operation, and includes undervoltage lockout and shoot-through protection—critical for safe inverter operation.

Key parameters used for selection

- 100 V operation margin for a 48 V system
- Integrated protections to reduce external circuitry
- Fast switching capability for efficient MOSFET control
- Good documentation and reference designs
- Small package suitable for compact PCBs

Alternatives

- DRV8301/8302 (integrated current sensing but more complex)
- IRS2186 or IR2110 (cheaper but require more external components)
- TMC6200 (high-end, but harder to source locally)

4.3 Power MOSFETs (Three-Phase Inverter)

Why this part?
N-channel MOSFETs with low Rds(on) were selected to minimize conduction losses in a high-current BLDC application. They support fast switching and are thermally efficient when paired with a shared heatsink.

Key parameters used for selection

- Voltage rating ≥ 60–80 V for a 48 V system
- Low Rds(on) (< 5 mΩ preferred) to reduce heating
- High current capability (≥ 100 A continuous)
- Fast switching characteristics

Alternatives

- IRFB4410 (affordable but slower switching)
- IPB047N06L3 (excellent efficiency, less available)
- GaN FETs (future upgrade: higher efficiency, much more expensive)

4.4 Current Sense Amplifier — INA240

Why this part?
The INA240 provides high CMRR and is designed for current measurement in noisy switching environments such as BLDC inverters. It produces clean, filtered outputs for the MCU's ADC.

Key parameters used for selection

- 120 dB CMRR for noise rejection
- High bandwidth for fast current loops
- Bidirectional current measurement
- Optimized for shunt-based sensing

Alternatives

- INA180 (simpler but noisier)
- ACS712 (Hall-based, lower accuracy)
- ZXCT series (cheaper but less performance)

4.5 Op-Amps — LMV324

Why this part?
LMV324 is a low-power, rail-to-rail quad op-amp suited for filtering, buffering, and signal conditioning. It handles current/voltage scaling and analog filtering for the MCU.

Key parameters used for selection

- Rail-to-rail I/O
- Low quiescent current
- Good noise performance for filtering
- Readily available locally

Alternatives

- TLV9004 (better performance, more expensive)
- LM324 (older and noisier, but cheaper)

4.6 Protection Components — TVS Diodes, Fuses, PTC, Schottky Diodes

Why these parts?
Protection components secure the controller from transients, reverse polarity, overcurrent, and analog pin overvoltage. Automotive-grade TVS diodes protect the battery input, and BAT54 diodes safeguard sensitive ADC inputs.

Key parameters used for selection

- 600–1500 W TVS rating (battery input)
- Fast clamping response
- Low-forward-voltage Schottkys for analog protection
- Resettable or single-use fuse depending on design tradeoff

5. Schematic Documentation

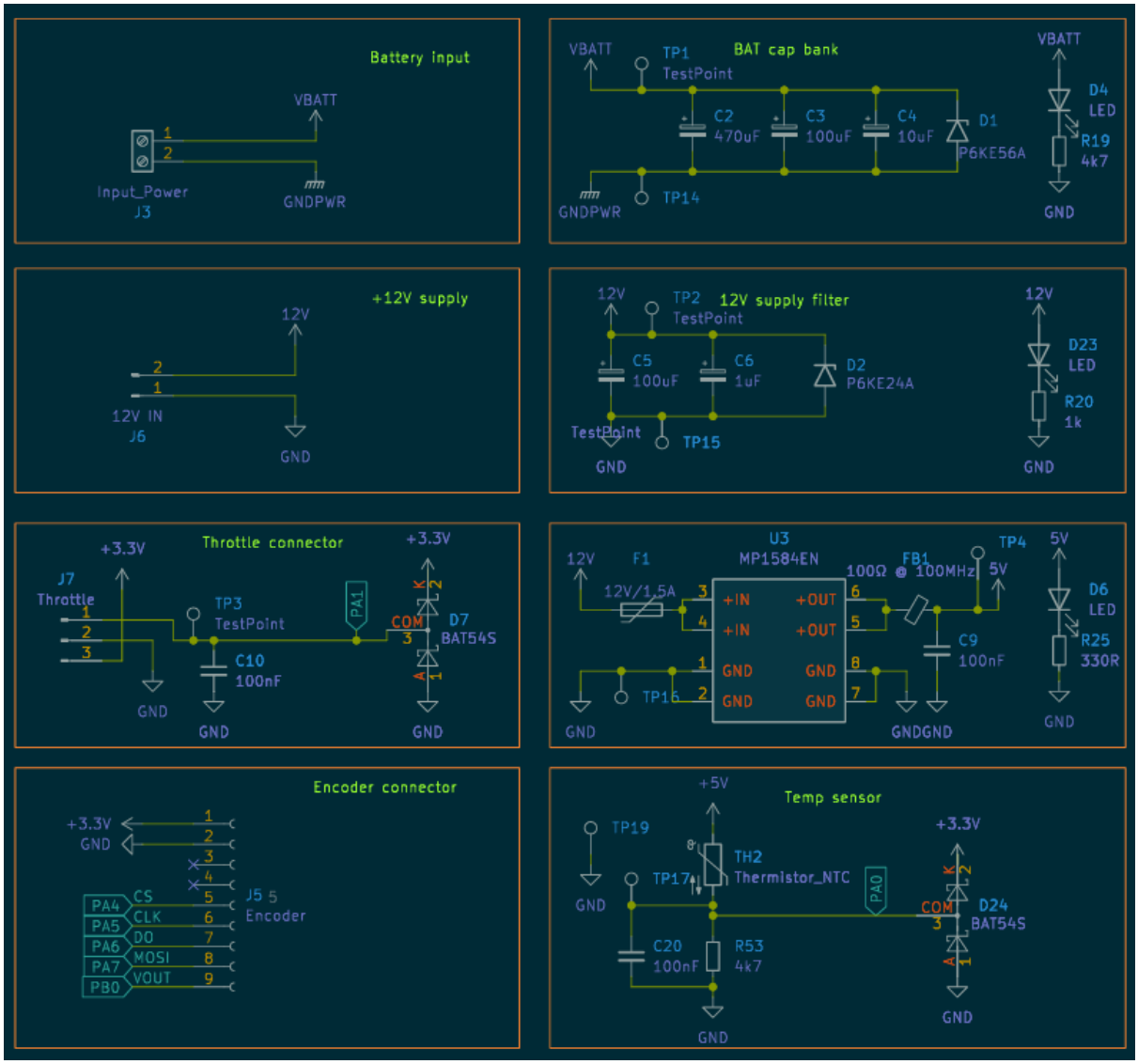

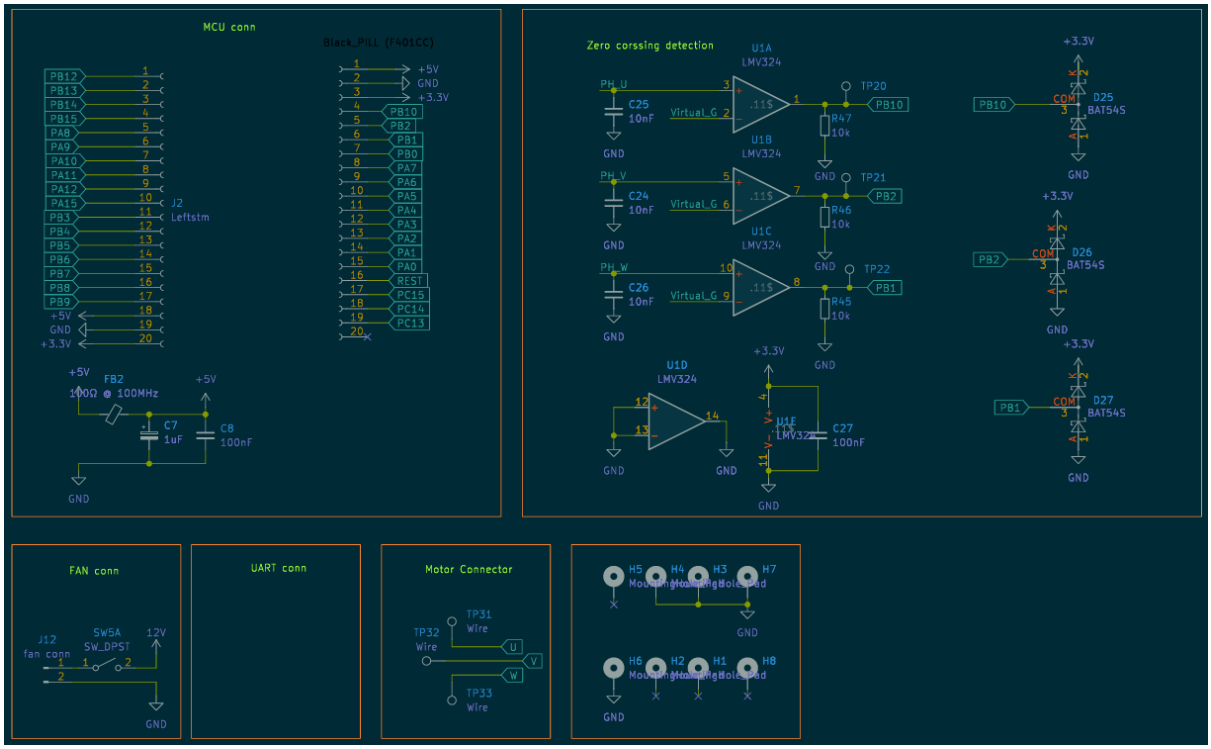
MCU conn
Black_PILL (F401CC)
J2
Leftstm
FB2
100Ω @ 100MHz
C7
1uF
C8
100nF
Zero corssing detection
U1A
LMV324
U1B
LMV324
U1C
LMV324
U1D
LMV324
U1E
LMV324
C25
10nF
C24
10nF
C26
10nF
R47
10k
R46
10k
R45
10k
TP20
TP21
TP22
D25
BAT54S
D26
BAT54S
D27
BAT54S
C27
100nF
FAN conn
J12
fan conn
SW5A
SW_DPST
12V
UART conn
Motor Connector
TP31
Wire
TP32
Wire
TP33
Wire
H5
H4
H3
H7
H6
H2
H1
H8
GND
+3.3V
+5V

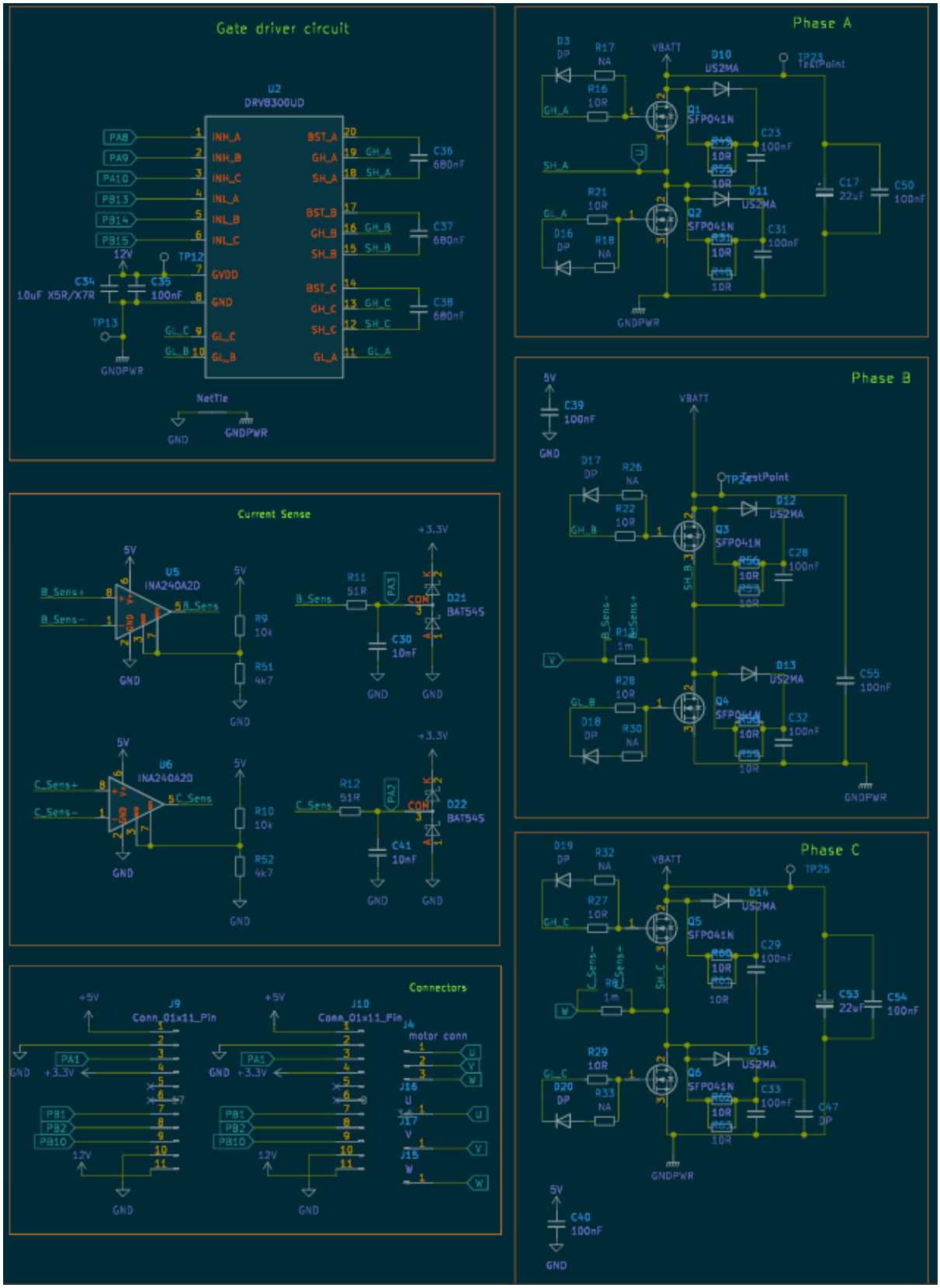
Gate driver circuit
U2
DRV8300UD
Phase A
Phase B
Phase C
Current Sense
U5
INA240A2D
U6
INA240A2D
Connectors
J9
Conn_01x11_Pin
J10
Conn_01x11_Pin
J4
motor conn
GNDPWR
GND

Battery Input and Protection Block

This block interfaces directly with the vehicle battery through the VBATT input connector. It includes high-energy TVS diodes and reverse-polarity / transient protection devices to clamp voltage spikes caused by inductive loads and switching events. A fuse is placed in series to protect the system against overcurrent and catastrophic faults. Bulk capacitors close to the input form a local energy reservoir, reducing voltage ripple during fast current transients drawn by the inverter stage.

Power Regulation Block (12V → 5V → 3.3V)

The main DC-DC conversion is handled by a buck regulator that steps the battery voltage down to a stable 5V rail. This rail supplies gate driver logic, analog circuits, and auxiliary peripherals. From the 5V rail, a low-noise 3.3V regulator powers the MCU and sensitive analog circuitry. Ferrite beads and decoupling capacitors are used extensively to suppress high-frequency noise propagation between power domains.

Gate Driver Block (DRV8300)

The gate driver IC serves as the interface between the MCU and the power MOSFETs. It receives PWM signals for the high-side and low-side switches of all three phases and generates the appropriate gate drive voltages using bootstrap circuits. Integrated protections such as undervoltage lockout, shoot-through prevention, and fault signaling improve system robustness. The driver also provides gate supply (GVDD) and phase sense connections required for proper switching operation.

Power Stage (Three-Phase Inverter)

The inverter consists of six N-channel MOSFETs arranged in a three-phase half-bridge configuration. Each phase drives one motor terminal (U, V, W). The MOSFETs are aligned to allow a shared heatsink, ensuring efficient thermal dissipation. Freewheeling diodes and snubber networks reduce voltage overshoot and ringing caused by high di/dt switching. This block is responsible for converting DC battery power into three-phase AC waveforms for motor control.

Current Sensing Block

Low-value shunt resistors (1 mΩ) are placed in the power return path to measure phase or bus current with minimal power loss. Precision current-sense amplifiers (INA240) amplify the small differential voltage across the shunts while rejecting common-mode switching noise. These conditioned signals are routed to the MCU ADC inputs and are used for torque control, overcurrent protection, and fault detection.

Phase Voltage Measurement Block

Each motor phase voltage is scaled using resistor divider networks and filtered before being fed into the MCU. This information is essential for sensorless control techniques such as back-EMF zero-crossing detection. RC filters are carefully chosen to attenuate switching noise while preserving phase information required for accurate commutation timing.

Zero-Crossing Detection Block

This block processes phase voltage signals to detect the zero-crossing points of back-EMF in sensorless BLDC operation. Comparators and op-amp stages generate clean digital transitions when the floating phase voltage crosses the virtual neutral point. These events are used by the MCU to estimate rotor position and synchronize commutation without mechanical sensors.

Analog Signal Conditioning Block (LMV324)

Multiple op-amp channels are used for signal conditioning tasks such as current filtering, voltage scaling, temperature sensing, and throttle signal processing. Each channel includes RC filtering to remove high-frequency switching noise. The conditioned outputs are optimized to match the ADC input range of the MCU, ensuring stable and accurate measurements.

Throttle Input Block

The throttle connector interfaces with an external accelerator pedal or potentiometer. Input protection diodes clamp overvoltage and ESD events, while RC filters smooth the signal. The MCU continuously monitors this input to determine the requested torque command and to perform plausibility and fault checks.

Temperature Sensing Block

An NTC thermistor is used to monitor system or MOSFET temperature. It forms a voltage divider whose output is filtered and fed to the MCU ADC. This enables thermal derating and overtemperature protection to prevent damage during high-load operation.

Encoder Interface Block

The encoder connector provides SPI communication between a rotor position sensor and the MCU. Due to the 1 MHz clock rate, the encoder is placed close to the MCU to maintain signal integrity. This block allows closed-loop control modes such as FOC or precise speed regulation when sensor-based operation is required.

MCU Block (STM32 / Black Pill)

The MCU is the central control unit of the system. It generates PWM signals for the gate driver, samples ADC inputs for current, voltage, temperature, and throttle signals, and executes motor control algorithms. Communication peripherals such as UART, SPI, and GPIO interfaces connect the MCU to the encoder, Bluetooth module, and debugging headers.

Communication and Debug Interfaces

UART connectors allow communication with external devices such as a Bluetooth module for telemetry and diagnostics. SWD/debug headers and test points are distributed across the board to facilitate firmware flashing, signal probing, and validation during development and testing.

Auxiliary Outputs and Fan Control

This block controls external peripherals such as a cooling fan. It includes a transistor or MOSFET driver with flyback protection to safely switch inductive loads. The MCU activates this block based on temperature feedback or operating conditions.

Grounding and Layout Strategy

The schematic clearly separates power ground (GNDPWR) from signal ground (GND), with a controlled net tie point to reduce noise coupling. Sensitive analog circuits reference clean ground, while high-current paths remain isolated, improving measurement accuracy and EMI performance.

6. PCB Layout Documentation

Placement strategy:

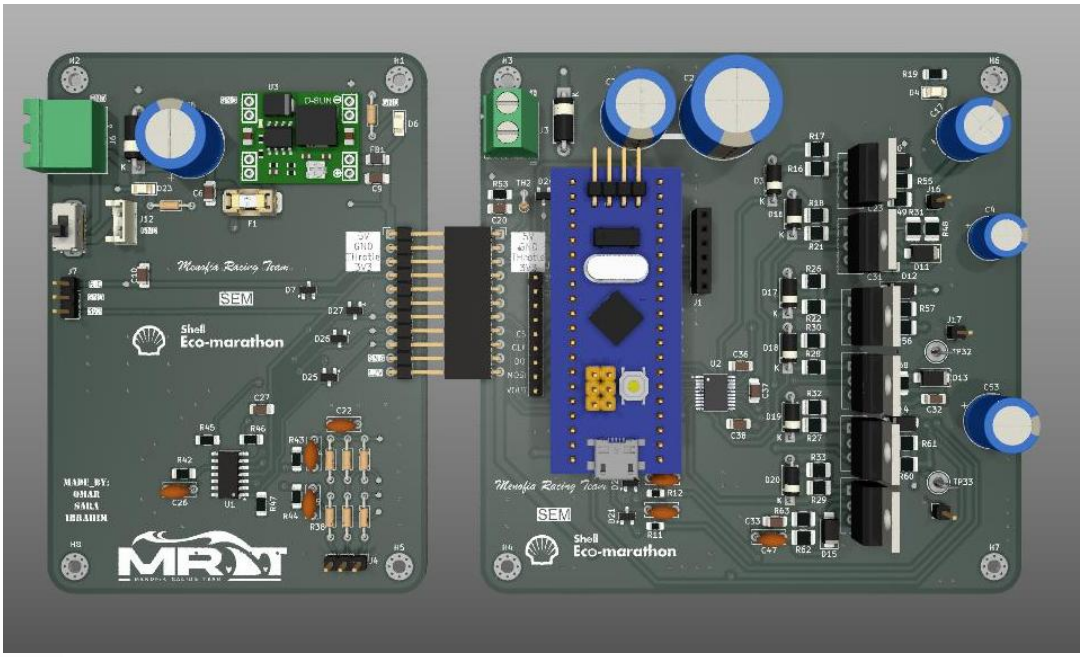

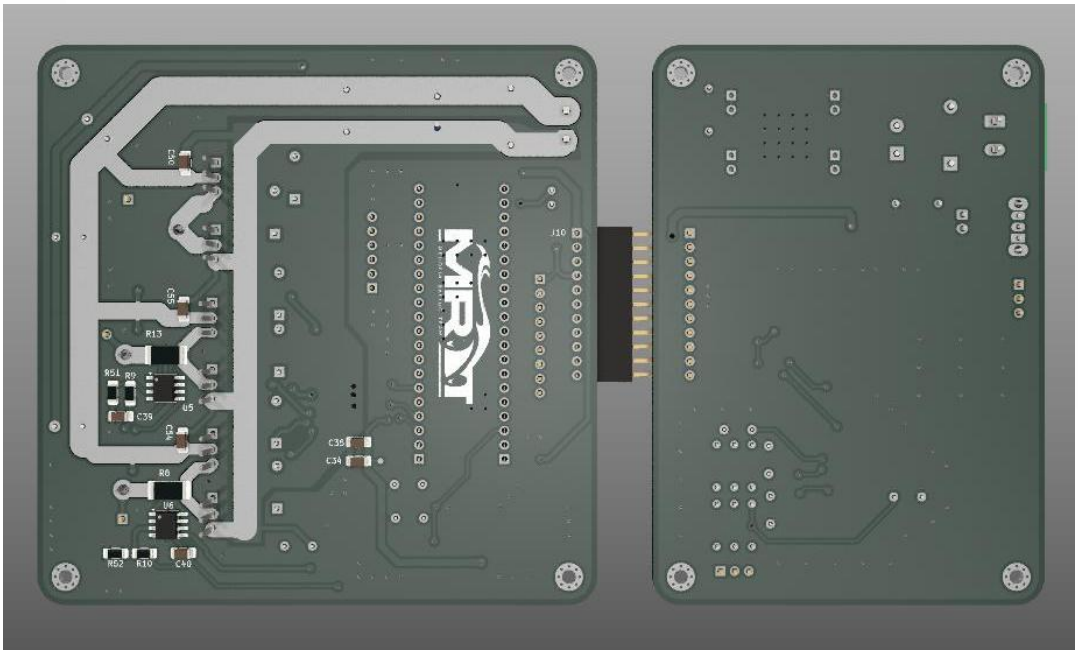

The system is divided into two separate PCBs for cost and logistical optimization, enabling a reduction in overall size and manufacturing expenses.

Small Board:

- The left PCB is dedicated to digital and analog circuitry and is physically isolated from the power stage to minimize the effects of high-frequency switching noise.
- This board also integrates auxiliary functions, including the cooling fan control and the zero-crossing detection circuit.

Power Board:

- **MOSFET Thermal Management**
  The primary challenge in the power board layout was MOSFET heat dissipation. To allow the installation of a large shared heatsink on the backside, all MOSFETs were aligned in a straight line with precise mechanical spacing. This constraint significantly limited placement options, leading to the selected layout as the most viable solution.
- **Power Rail Routing**
  All high-current power rails (VBAT and GND) were routed on the bottom layer using wide, exposed copper pours. These traces are intended to be solder-coated to increase current-carrying capacity and reduce thermal stress.
- **Layer Routing Constraints**
  Due to the use of a two-layer PCB, all gate drive and snubber circuits were routed on the top layer. The gate drive circuitry is placed on the left side of each MOSFET, while the snubber components are positioned on the right.
- **Gate Driver Placement**
  To minimize gate loop inductance, gate driver traces were kept as short as possible. Consequently, the gate driver IC is placed between the MOSFET array and the MCU, with the MCU positioned close to the driver to ensure signal integrity. This requirement largely defined the final layout.
- **Current Sensing Circuit**
  A 1 mΩ shunt resistor is placed on the bottom layer to minimize conduction losses. The current-sense op-amp placement follows the manufacturer's datasheet recommendations, with careful attention to preventing distortion from high-frequency switching. Properly calculated filtering components were added to ensure accurate signal conditioning.
- **Encoder Interface**
  The encoder communicates via SPI at a 1 MHz clock frequency. To maintain signal integrity, it is placed in close proximity to the MCU, making the current placement reasonable.

Layout considerations

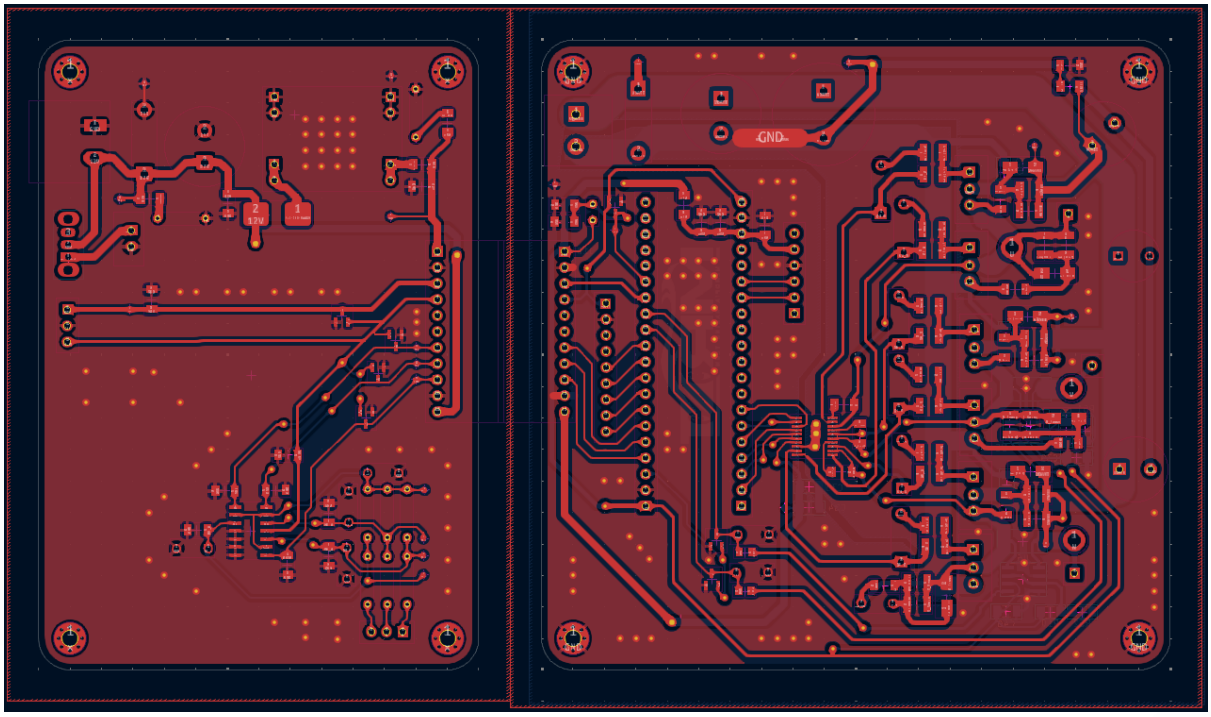

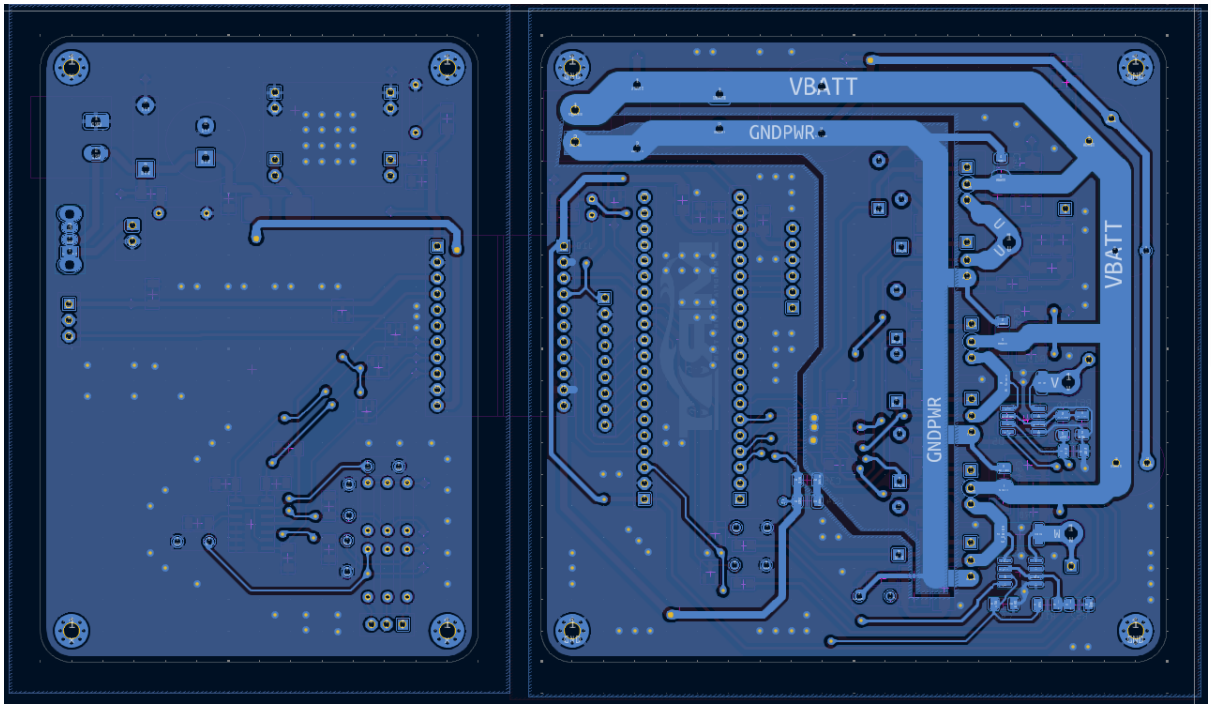

- **Grounding Strategy**
  Digital ground and power ground are kept physically separated and connected at a single point using a star-ground configuration. This connection is implemented at the

negative terminal of a bulk capacitor to provide a low-impedance reference and minimize noise coupling.

- **Trace Clearance**
  Adequate clearance between high-power and low-power traces was calculated and maintained, ensuring safe operation and eliminating the risk of short circuits or solder bridging.
- **Decoupling Capacitor Placement**
  All decoupling capacitors are placed as close as possible to their respective IC power pins to minimize trace inductance and reduce voltage transients during switching events.

7. Firmware-Hardware Interface

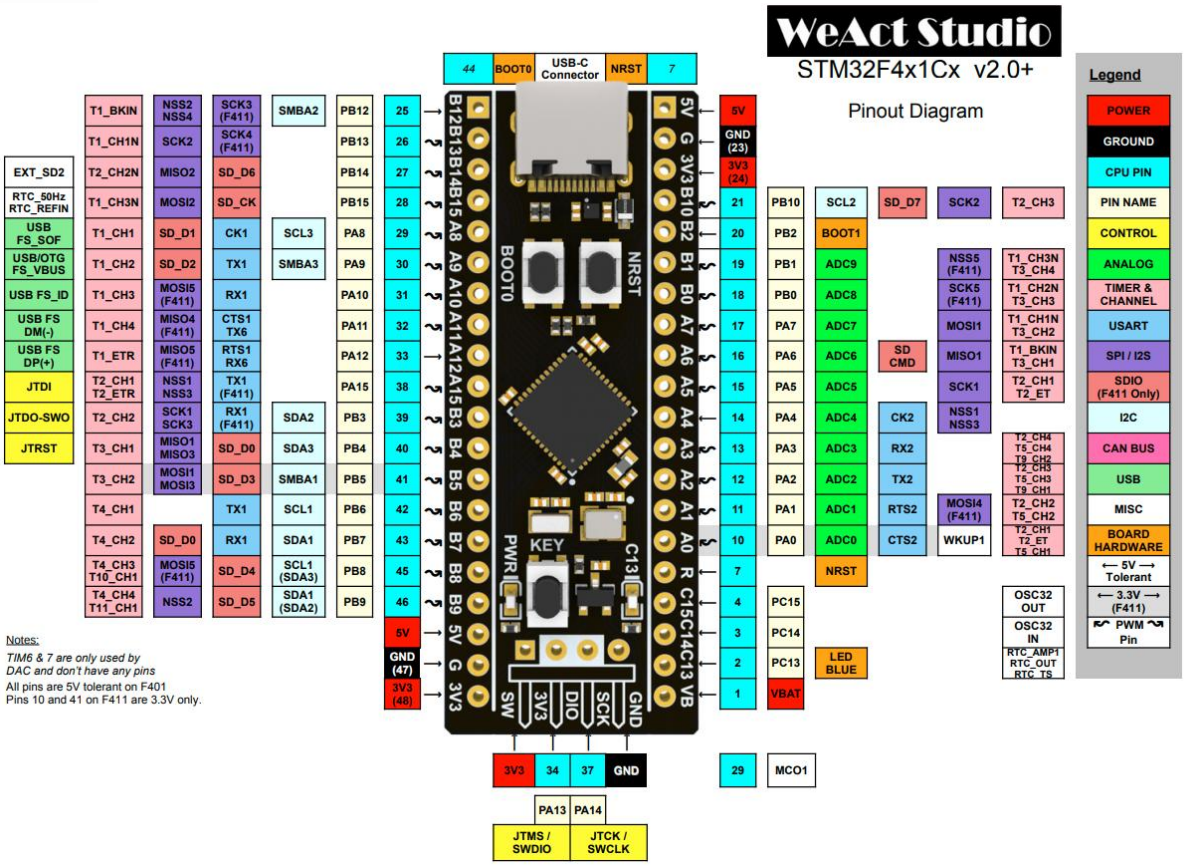

MCU Pins Table

PIN	Function	Type
PA0	Reads NTC	Analog Input

PA1	Analog signal for speed control	Analog Input
PA2	Current senser for phase V	Analog Input
PA3	Current senser for phase W	Analog Input
PA4	Chip select for the encoder SPI	Digital Output
PA5	Clock signal for the encoder SPI	Digital Output
PA6	Encoder data output	Digital Input
PA7	MOSI	Digital Output
PB0	PWM input for rotor position	Digital Input
PB6	UART RX	Digital Input
PB7	UART TX	Digital Output
PB10	Phase U Zero crossing	Digital Input
PB2	Phase V Zero crossing	Digital Input
PB1	Phase W Zero crossing	Digital Input
PA8	Phase U high side PWM	PWM
PA9	Phase V high side PWM	PWM
PA10	Phase W high side PWM	PWM
PB13	Phase U low side PWM	PWM
PB14	Phase V low side PWM	PWM
PB15	Phase W low side PWM	PWM

8. Testing Plan

Pre-Fabrication Tests

- ERC and DRC check is clear

- No simulation is done for this design due to the non-availability of most of the part used in the known simulation softwares.
- All of the used parts are available locally in Egypt except for the mosfets and the gate driver and the current sense op-amp

Bring-Up Plan

1. Start With the Left Board (Power & Sensor Board)

Step 1 — Configure the DC-DC Converter

- Set the DC-DC converter so that **12 V input → stable 5 V output**.
- Verify it always outputs **5 V** regardless of input variations.

Step 2 — Solder the Converter to the Board

- Mount the converter onto the board.
- Inspect soldering and ensure proper grounding and track continuity.

Step 3 — Power Validation

- Apply 12 V and check:
  - **5 V output exists and is stable**
  - **12 V rail is available**
  - **5 V rail feeding the second board is correct**

Step 4 — Throttle Circuit Testing

- Solder the throttle circuit.
- Power it with the 5 V rail.
- Check if:
  - 5 V supply is present
  - Throttle output signal is measurable and correct

Step 5 — Zero Crossing Circuit Testing

- Solder the zero-cross / zero-current circuit.
- Feed it with any basic motor or test source.
- Confirm:

- Output is generated as expected
- No abnormal noise or faults

- If issues appear → debug and fix.

2. Move to the Second Board (Driver + MOSFETs Board)

1. **Solder the STM Connector**
   - Begin by soldering the STM microcontroller connector (e.g., for debugging or communication).
   - Ensure proper orientation and secure connections.
2. **Solder the UART Connector**
   - Next, solder the UART connector for serial communication.
   - Confirm that the signal lines (TX, RX) are correctly placed.
3. **Solder the Encoder Connector**
   - Solder the connector for the encoder.
   - Ensure correct signal pinout for the encoder's A, B, and Z channels.
4. **Solder the NTC (Negative Temperature Coefficient) Resistor**
   - Solder the NTC thermistor for temperature monitoring or overcurrent protection.
   - Check for correct orientation and ensure it's connected to the relevant circuit for thermal protection.
5. **Solder the Gate Driver**
   - Solder the gate driver IC that will control the MOSFETs.
   - Verify that the driver is correctly oriented, and all pins are securely soldered.
6. **Solder and Test the First Phase**
   - Solder the components for the first phase (e.g., first pair of MOSFETs).
   - After soldering, test the phase by applying a signal to the gate driver and observing the switching waveform.
   - Measure gate voltages and ensure that the phase operates correctly.
7. **Repeat the Process for Each Phase**

- For the second and third phases, repeat the same soldering and testing steps as for the first phase.
- Ensure that each phase is individually soldered and tested for proper switching and performance.
- Test the current sensor IC for each phase to ensure accurate current measurement and sensor output.

8. **Increase Copper Thickness with Solder**
    - After all phases are working correctly, reinforce the copper tracks by adding additional solder to the PCB tracks (tinning the tracks).
    - This step strengthens the board's current-carrying capability and improves the overall robustness.

9. Final Notes & Future Improvements

9.1 Future Design Improvements

Several enhancements can be considered for the next hardware revision to improve performance, reliability, and manufacturability:

- Evaluate the use of **GaN MOSFETs** to reduce switching losses, improve efficiency, and enable higher switching frequencies.
- Improve the **interconnection between the control PCB and power PCB**, as the current solution is not optimal in terms of robustness, signal integrity, and assembly.
- Reassess the choice of **PCB connectors**, particularly for power and high-speed signals, to ensure better current handling, mechanical reliability, and serviceability.
- Design with the assumption that **any component may need to be soldered or desoldered at any time**, and ensure sufficient access, spacing, and thermal relief.
- While larger pads often improve solderability and reliability, **pad size should be optimized** rather than maximized.
- Always verify and review **ground reference points**, as grounding mistakes are a common source of noise and functional issues.

9.2 Schematic Design Notes

The following considerations were applied during schematic design and should be maintained or refined in future iterations:

- Reverse polarity protection (RPP) circuitry is not required on-board, as it can be integrated directly into the power connector.
- The **DC bus capacitor bank** is designed to supply instantaneous current during acceleration and transient load conditions.
- **TVS diodes** are placed close to the battery connector to clamp voltage spikes and protect the system from transient events.
- The **input fuse must be located before the DC-DC converter** to protect the converter in case of overcurrent or fault conditions.
- **BAT54 Schottky diodes** are used for analog input protection to prevent both overvoltage and undervoltage conditions.
- Not all **STM32 GPIO pins are 5V tolerant**; special care must be taken when interfacing with 5V logic or sensors.
- Most **100 nF capacitors** serve as local decoupling capacitors to suppress high-frequency noise and stabilize power rails.
- **Ferrite beads** are added to reduce high-frequency noise coupling and improve EMC performance.
- Zero-crossing detection circuit outputs are configured as **pull-down signals** to ensure proper logic referencing.
- MOSFET switching frequency must be carefully selected with respect to **switching losses, thermal performance, and motor efficiency**.
- Gate resistors should be **calculated separately for turn-on and turn-off paths** to control switching speed and minimize EMI.
- Proper **thermal analysis** is mandatory, including MOSFET junction temperature estimation, heatsink sizing, and PCB thermal spreading.

9.3 Component Selection Notes

- Select connectors that can safely handle the required **current, voltage, and mechanical stress**, with an appropriate pitch.
- Always verify **component voltage, current, and temperature ratings**, and maintain adequate safety margins.

9.4 PCB Layout Notes

- The encoder communicates via **SPI at sub-MHz frequencies** and must be placed as close as possible to the MCU pins.
- MCU power pins must be properly decoupled, with **bypass capacitors placed very close to the pins**.
- Careful placement of **analog and digital filters** is required to maintain signal integrity.

- **Test points must be added** for critical signals to simplify debugging and validation.
- Thermal management must be considered during layout, including copper pours, vias, and component spacing.
- **EMI considerations are critical** and must be addressed through routing, filtering, and grounding.
- Ground planes must be carefully designed, with controlled connection points between different ground domains.
- PCB rules such as **trace width, clearance, silkscreen readability, logos, and teardrops** must be reviewed and validated.

9.5 Assembly and Testing Notes

- Verify the **orientation of the STM32 MCU** before assembly.
- Ensure the correct orientation of all polarized and direction-sensitive components.
- Avoid touching MOSFETs with bare hands to prevent **ESD damage**.
- Test the **DC-DC converter output voltage** before populating sensitive components.
- Ensure that **mounting holes connected to ground** are properly tied to the ground plane.
- The NTC temperature sensor wire is intentionally long and is mounted behind the MOSFET heatsink for accurate thermal measurement.
- In some test scenarios, it may be necessary to **temporarily short the virtual ground capacitor** for debugging purposes.